0 603 230 703

Stand ~~99-06~~
Issue 08-04-15

Fig./Abb. 1

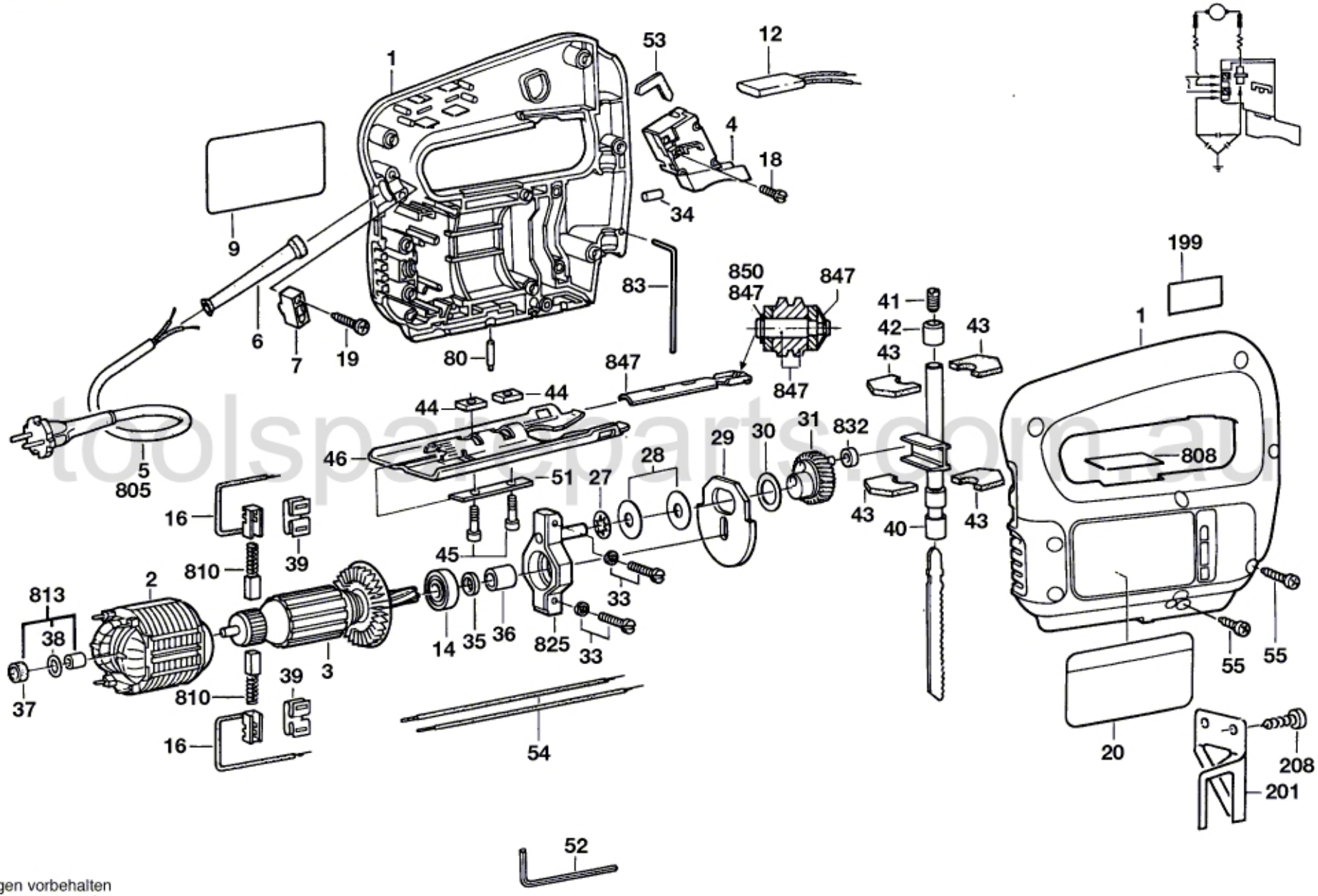

Änderungen vorbehalten
Modifications reserved
Modifications reservees
Salvo modificaciones

toolspartsparts.com.au